TECNOLOGÍA ELECTRÓNICA
CIRCUITOS I

EJEMPLOS VIR

- Hallar R_T, V_1, V_2, V_3, V_4, V_5, V_6, V_7, V_8, V_9, V_{10}, I_T, I_1, I_2, I_3, I_4, I_5, I_6, I_7, I_8, I_9, I_{10}, P_T en el siguiente circuito:

Observe que el circuito completo contiene realmente dos circuitos, uno interno y otro externo que están alimentados con la misma fuente de voltaje, sabemos que el voltaje en un circuito en paralelo es el mismo. Al resumir cada circuito llegaremos a dos resistencias en paralelo para hallar finalmente la R_T. Resolveremos cada circuito independientemente.

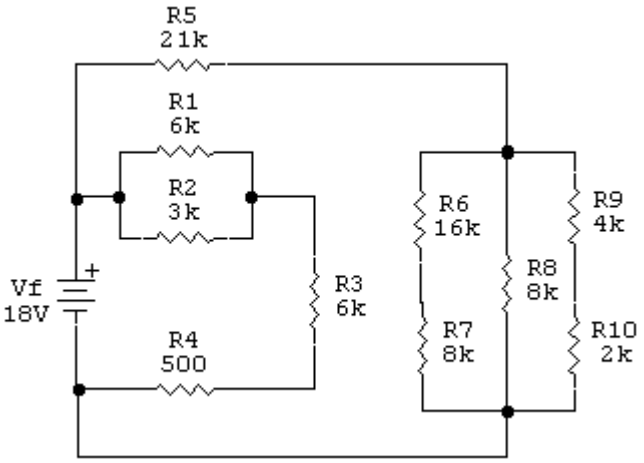

Circuito Externo:

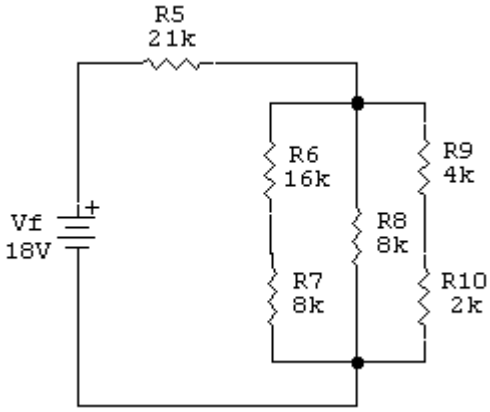

$$R_A = R_6 + R_7 \therefore R_A = 24K\Omega$$

$$R_B = R_9 + R_{10} \therefore R_B = 6K\Omega$$

$$\frac{1}{R_C} = \frac{1}{R_A} + \frac{1}{R_8} + \frac{1}{R_B} \therefore \frac{1}{R_C} = \frac{1}{24K\Omega} + \frac{1}{8K\Omega} + \frac{1}{6K\Omega}$$

$$\frac{1}{R_C} = \frac{1+3+4}{24K\Omega} \therefore \frac{1}{R_C} = \frac{8}{24K\Omega} \therefore R_C = 3K\Omega$$

$$R_D = R_5 + R_C \therefore R_D = 24K\Omega$$

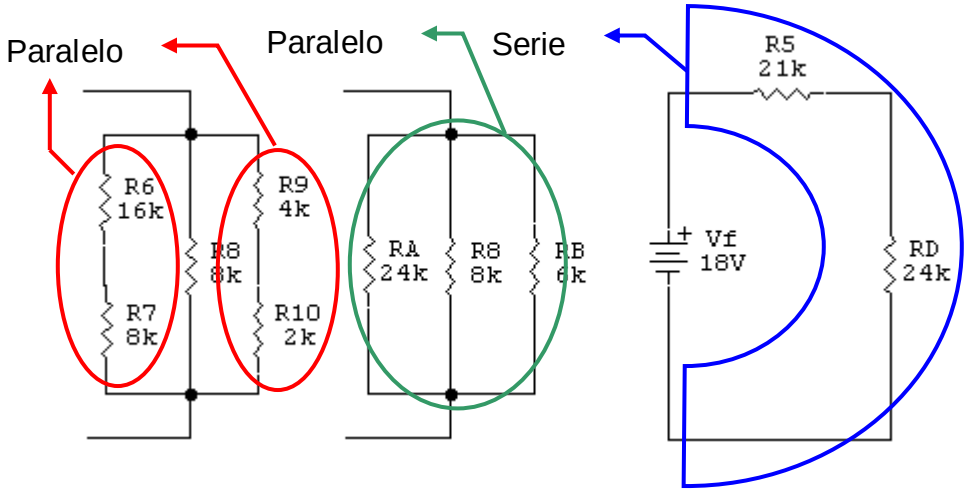

$$I_D = \frac{V_D}{R_D} \therefore I_D = 0{,}75mA = I_5 = I_C \Rightarrow \text{Circuto en serie}$$

$$V_5 = I_5 * R_5 \therefore V_5 = 15{,}75V$$

$$V_C = I_C * R_C \therefore V_C = 2{,}25V = V_A = V_8 = V_B \Rightarrow \text{Circuito en paralelo}$$

$$I_8 = \frac{V_8}{R_8} \therefore I_8 = 0{,}28mA$$

$$I_A = \frac{V_A}{R_A} \therefore I_A = 0{,}093mA = I_6 = I_7 \Rightarrow \text{Circuito en serie}$$

$$V_6 = I_6 * R_6 \therefore V_6 = 1{,}5V \qquad V_7 = I_7 * R_7 \therefore V_7 = 0{,}74V$$

$$I_B = \frac{V_B}{R_B} \therefore I_B = 0{,}375mA = I_9 = I_{10} \Rightarrow \text{Circuito en serie}$$

$$V_9 = I_9 * R_9 \therefore V_9 = 1{,}5V \qquad V_{10} = I_{10} * R_{10} \therefore V_{10} = 0{,}75V$$

Circuito Interno:

$$R_E = \frac{R_1 * R_2}{R_1 + R_2} \therefore R_E = 2K\Omega$$

$$R_F = R_E + R_3 + R_4 \therefore R_F = 8K\Omega$$

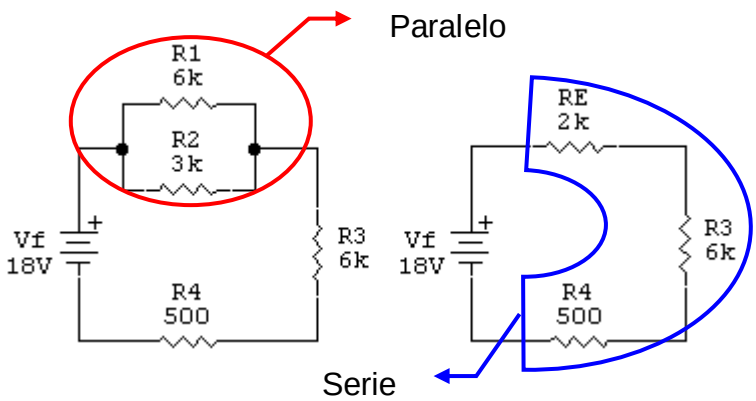

$$I_F = \frac{V_F}{R_F} \therefore I_F = 2{,}25mA = I_E = I_3 = I_4 \Rightarrow \text{Circuito en serie}$$

$$V_3 = I_3 * R_3 \therefore V_3 = 13{,}5V \qquad V_4 = I_4 * R_4 \therefore V_4 = 1{,}125V$$

$$V_E = I_E * R_E \therefore V_E = 3{,}375V = V_1 = V_2 \Rightarrow \text{Circuito en paralelo}$$

$$I_1 = \frac{V_1}{R_1} \therefore I_1 = 0{,}56mA \qquad I_2 = \frac{V_2}{R_2} \therefore I_2 = 1{,}68mA$$

Circuito Completo:

$$R_T = \frac{R_D * R_F}{R_D + R_F} \therefore R_T = 6K\Omega$$

$$I_T = \frac{Vf}{R_T} \therefore I_T = 3mA$$

$$\text{LKC} \Rightarrow I_T = I_F + I_D$$

$$P_T = Vf * I_T \therefore P_T = 54mW$$

$$Vf = V_F = V_D = 18V$$

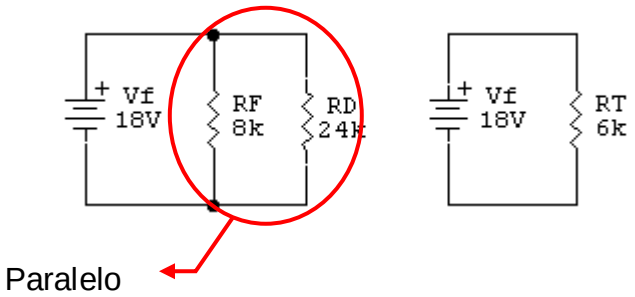

- Hallar Vf (voltaje fuente) si I_4 = 0,17mA.

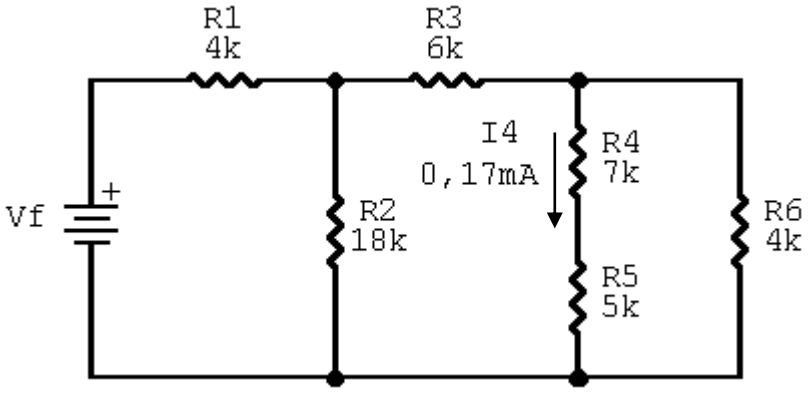

R_4 y R_5 están en serie por consiguiente la $I_4 = I_5$ = 0,17mA

$$R_A = R_4 + R_5 \therefore R_A = 12K\Omega$$

$$I_4 = I_5 = I_A = 0.17mA$$

$$V_A = I_A * R_A \therefore V_A = 2{,}04V = V_6 \Rightarrow \text{Circuito en paralelo}$$

$$I_6 = \frac{V_6}{R_6} \therefore I_6 = 0{,}51mA \qquad \text{LKC} \Rightarrow I_3 = I_A + I_6 \therefore I_3 = 0{,}68mA$$

$$V_3 = I_3 * R_3 \therefore V_3 = 4.08V \qquad \text{LKV} \Rightarrow V_2 = V_3 + V_A \therefore V_2 = 6{,}12V$$

$$I_2 = \frac{V_2}{R_2} \therefore I_2 = 0{,}34mA \qquad \text{LKC} \Rightarrow I_1 = I_2 + I_3 \therefore I_1 = 1{,}02mA = I_T$$

$$V_1 = I_1 * R_1 \therefore V_1 = 4{,}08V \qquad \text{LKV} \Rightarrow Vf = V_1 + V_2 \therefore Vf = 10{,}2V$$